Hi-MO 9

LONGi SOLAR

LR9-66HYD

730~760M

Lifecycle Performance
Optimal power generation through the entire product lifecycle

Value-Added
More than 6.5% power generation gain

Ultimate Safety
TaiRay wafer & BC technology enhance high product reliability

Premium
Smart manufacturing & LONGi lifecycle standards deliver exceptional quality

HPBC 2.0 | TaiRay | N-type

Bifacial Power Generation

12Y Product Warranty | **30Y** Performance Warranty

Complete System and Product Certifications

IEC61215, IEC 61730

ISO9001: Quality Management System

ISO14001: Environment Management System

ISO45001: Occupational Health and Safety

IEC62941: Quality System for PV Module Manufacturing

TÜVRheinland CERTIFIED | TÜV SÜD | CE | TIER 1 Bloomberg NEW ENERGY FINANCE

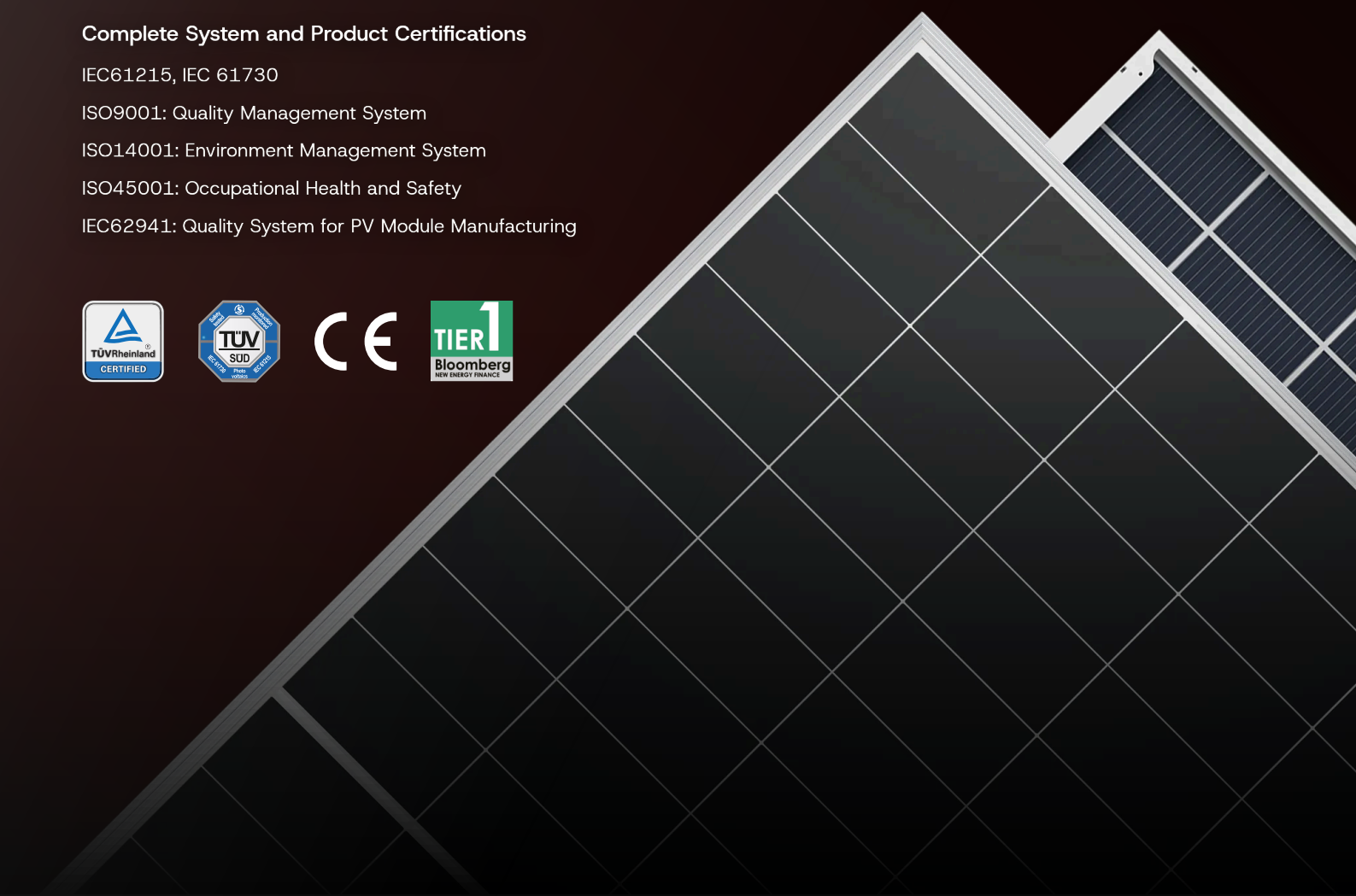

Hi-MO 9

LR9-66HYD

24.47%	0~3%	1%	0.35%	BC-CELL
MAX MODULE EFFICIENCY	POWER TOLERANCE	FIRST YEAR POWER DEGRADATION	YEAR 2-30 POWER DEGRADATION	LOWER OPERATING TEMPERATURE

Mechanical Parameters

Cell Orientation	132 (6×22)
Junction Box	IP68, three diodes
Output Cable	4mm2, +400, -200mm/±1400mm length can be customized
Glass	Dual glass, 2.0+2.0mm semi-tempered glass
Frame	Anodized aluminum alloy frame
Weight	37.3 kg
Dimension	2384×1303×33mm
Packaging	33 pcs per pallet / 594 pcs per 40'HC

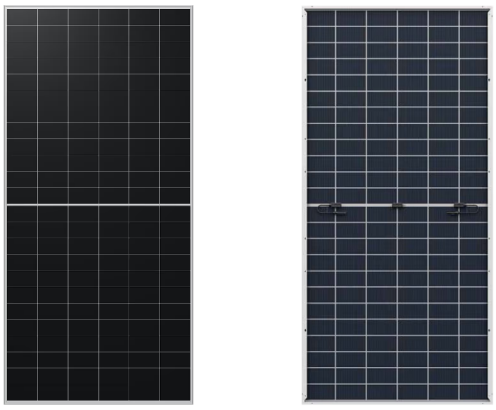

Electrical characteristics with different rear side power gain

Pmax /W	Voc/V	Isc /A	Vmp/V	Imp /A	Pmax gain
788	49.20	19.59	42.79	18.41	5%
825	49.20	20.53	42.79	19.28	10%
863	49.20	21.46	42.79	20.16	15%
900	49.20	22.39	42.79	21.04	20%
938	49.20	23.33	42.79	21.91	25%

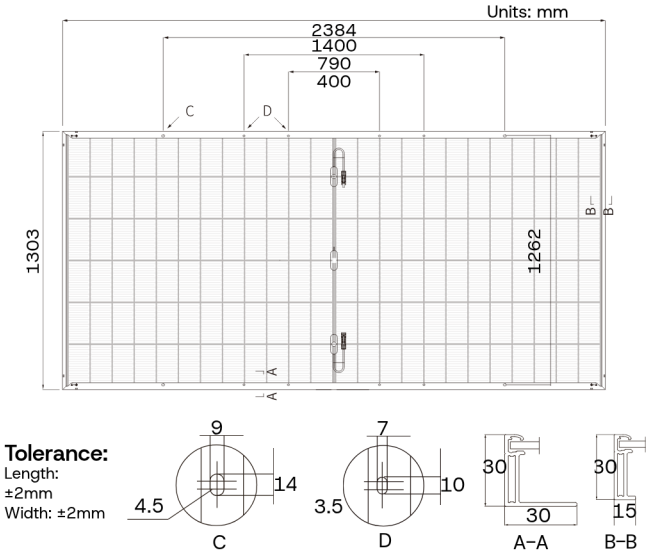

Electrical Characteristics

STC : AM1.5 1000W/m2 25°C NOCT : AM1.5 800W/m2 20°C 1m/s Test uncertainty for Pmax ±3%

Module Type	LR9-66HYD-730M		LR9-66HYD-735M		LR9-66HYD-740M		LR9-66HYD-745M		LR9-66HYD-750M		LR9-66HYD-755M	
Testing Condition	STC	NOCT	STC	NOCT	STC	NOCT	STC	NOCT	STC	NOCT	STC	NOCT
Maximum Power (Pmax/W)	730	554.8	735	558.6	740	562.4	745	566.2	750	570.0	755	573.8
Open Circuit Voltage (Voc/V)	48.92	46.47	48.99	46.54	49.06	46.61	49.13	46.67	49.20	46.74	49.27	46.81
Short Circuit Current (Isc/A)	18.50	14.80	18.54	14.83	18.58	14.86	18.62	14.90	18.66	14.93	18.70	14.96
Voltage at Maximum Power (Vmp/V)	42.19	40.08	42.34	40.22	42.49	40.37	42.64	40.51	42.79	40.65	42.94	40.79
Current at Maximum Power (Imp/A)	17.30	13.84	17.36	13.89	17.42	13.93	17.47	13.98	17.53	14.02	17.58	14.07
Module Efficiency(%)	23.50		23.66		23.82		23.98		24.14		24.31	

Operating Parameters

Operational Temperature	-40°C ~ +85°C
Power Output Tolerance	0 ~ 3%
Maximum System Voltage	DC1500V (IEC)
Maximum Series Fuse Rating	35A
Nominal Operating Cell Temperature	45±2°C
Protection Class	Class II
Fire Rating	IEC Class C

Mechanical Loading

Front Side Maximum Static Loading	5400Pa
Rear Side Maximum Static Loading	2400Pa
Hailstone Test	25mm Hailstone at the speed of 23m/s

Temperature Ratings (STC)

Temperature Coefficient of Isc	+0.050%/°C
Temperature Coefficient of Voc	-0.200%/°C
Temperature Coefficient of Pmax	-0.260%/°C

LONGi SOLAR

Specifications included in this datasheet are subject to change without notice. LONGi reserves the right of final interpretation.